Echo Sensitivity/Ringing Test Circuit for EP Models

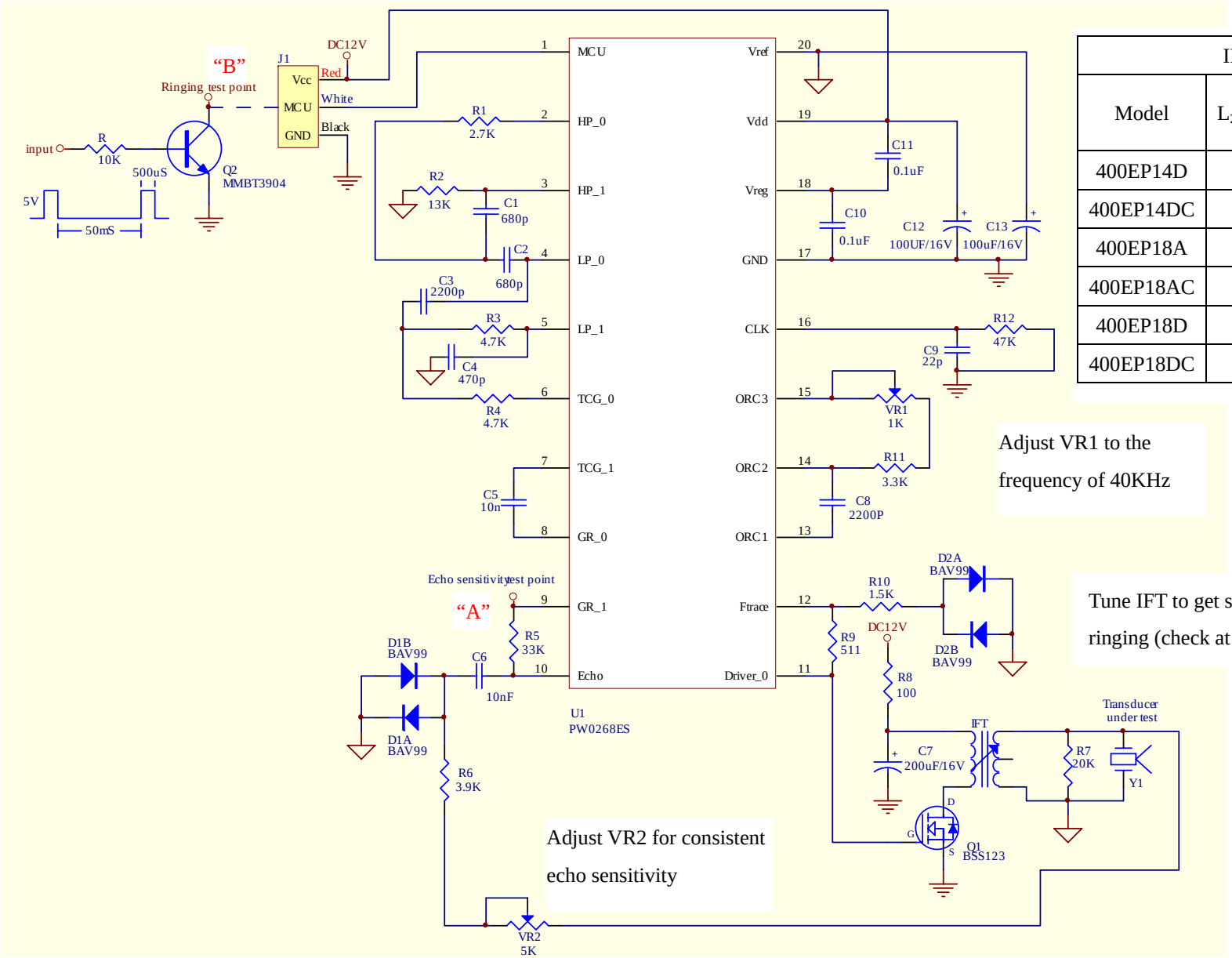

IFT Specification				R7
Model	L_{2nd} .(mH)	Turn Ratio	Q @40KHz	
400EP14D	10.2	1:10	76	20K
400EP14DC	5.1	1:10	60	20K
400EP18A	6.3	1:10	37	20K
400EP18AC	4.5	1:10	40	20K
400EP18D	7.0	1:10	59	20K
400EP18DC	3.5	1:10	73	8.2K